NOTES:

1. INTERPRET DRAWINGS IN ACCORDANCE WITH MIL-STD-100, MIL-T-31000.
2. THIS DRAWING IS A DUPLICATE OF S200-5038

REVISION HISTORY				
SHEET	REV	DESCRIPTION	DATE	APPROVED
1	-			
1	A	ECN: RSOIS-ECN-000004	02/06/25	
1	B	ECN: RSOIS-ECN-000006	03/03/05	RM

NOTE:
THIS PART IS FOR SPECIAL USE ONLY AND IS NOT PART OF THE STANDARD UNIT.
IF USED, RADIO MUST BE DISABLED.
SIMULTANEOUS USE IS NOT AN OPTION IN THIS CONFIGURATION.

SEE SHEET 3

SEE SHEETS 5 & 6

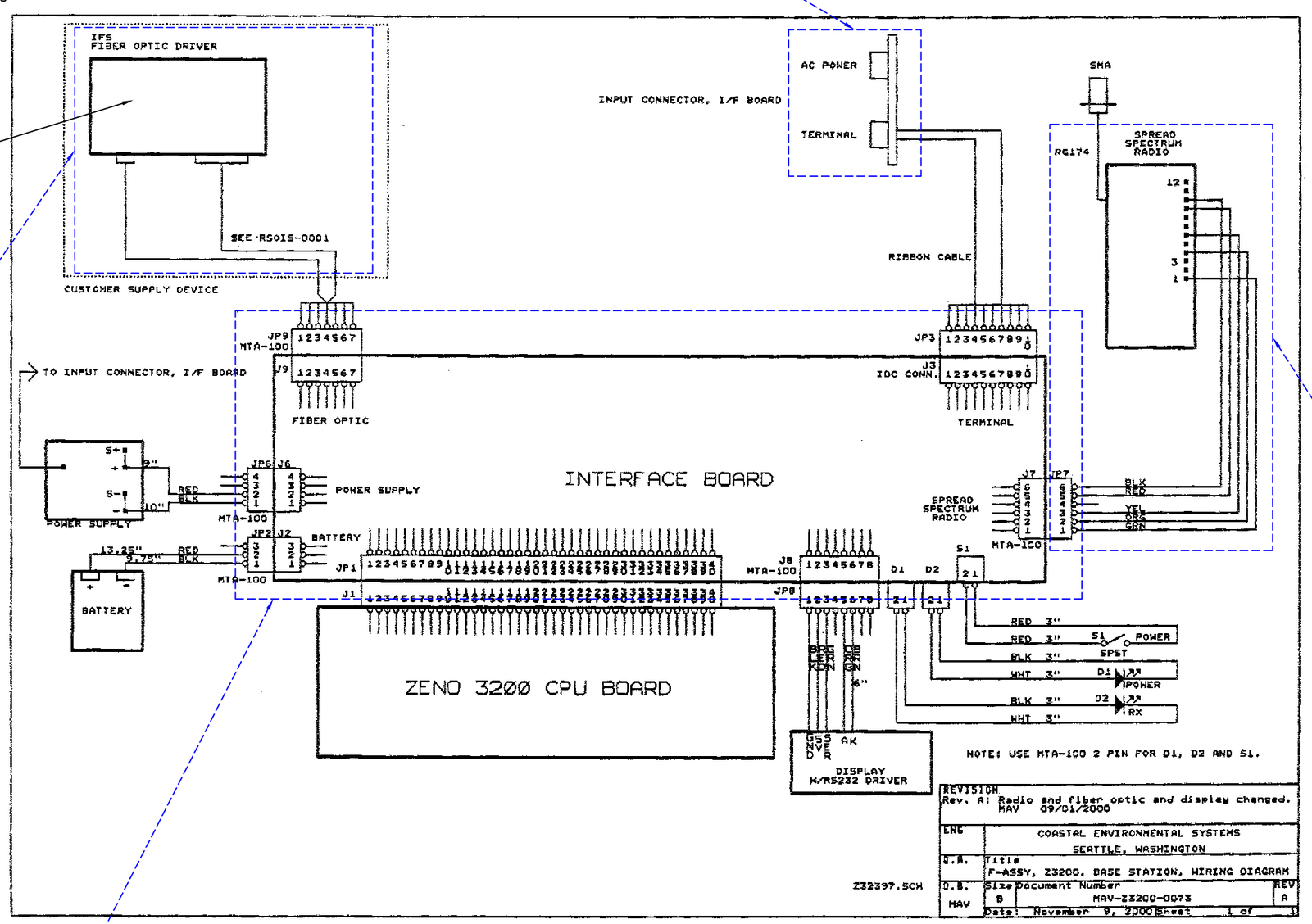

SEE SHEET 4

SEE SHEET 2

NOTE: CABLE IS 22AWG COLOR CODED PVC WITH UV PROTECTION OUTER SLEEVE

UNLESS OTHERWISE SPECIFIED:
DIMENSIONS ARE IN INCHES
TOLERANCES, ANGLES, ±.5°
3 PLACES DECIMALS ±.005
2 PLACES DECIMALS ±.02

PREPARED	PAYNE	BMP
CHECKED	LEONARDO	AL
DESIGN	LEONARDO	AL
C.M.	DAVIDSON	KD
APPROVED	LEONARDO	AL
DATE	01/11/06	

U.S. DEPARTMENT OF COMMERCE
NATIONAL OCEANIC & ATMOSPHERIC ADMINISTRATION
NATIONAL WEATHER SERVICE
1325 EAST WEST HIGHWAY
SILVER SPRING, MD 20910

RSOIS WIRING DIAGRAM FOR BASESTATION

SIZE	CAGE CODE	DRAWING NO.	REV
D	82187	J700-4-5038	B

SCALE NONE SHEET 1 OF 6 FILE NO. J700-4-5038 LAST UPDATE: 04/22/03, 16:33

REV STATUS	REV	B	A	A	A	B	B								
	SH	1	2	3	4	5	6	7	8	9	10	11	12	13	14	15

REVISION HISTORY				
SHEET	REV	DESCRIPTION	DATE	APPROVED
2	–	1ST RELEASE	02/02/19	
2	A	ECN: RSOIS-ECN-000006	03/03/05	RM

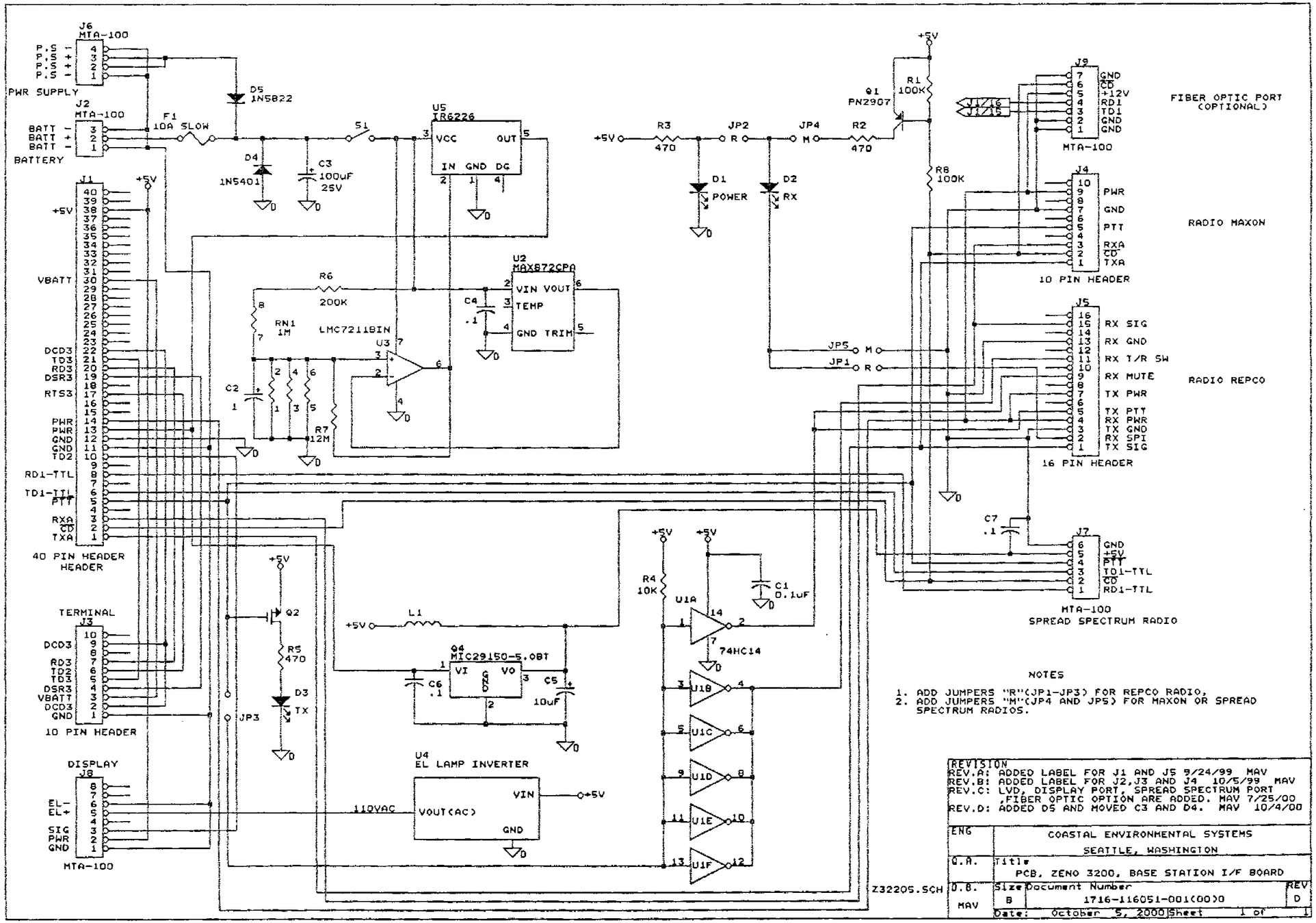

REVISION
REV.A: ADDED LABEL FOR J1 AND J5 9/24/99 MAV
REV.B: ADDED LABEL FOR J2,J3 AND J4 10/5/99 MAV
REV.C: LVD, DISPLAY PORT, SPREAD SPECTRUM PORT ,FIBER OPTIC OPTION ARE ADDED. MAV 7/25/00
REV.D: ADDED D5 AND MOVED C3 AND D4. MAV 10/4/00

ENG	COASTAL ENVIRONMENTAL SYSTEMS SEATTLE, WASHINGTON		
Q.A.	Title PCB, ZENO 3200, BASE STATION I/F BOARD		
D.B. MAV	Size B	Document Number 1716-116051-001(00)0	REV D
	Date: October 5, 2000	Sheet 1 of 1	

SIZE D	CAGE CODE 82187	DWG NO. J700-4-5038	REV A
SCALE: NONE	SHEET 2 OF 6	FILE: J700-4-5038-2	

LAST UPDATE: 04/22/03, 16:33

REVISION HISTORY				
SHEET	REV	DESCRIPTION	DATE	APPROVED
3	–	1ST RELEASE	02/02/19	
3	A	ECN: RSOIS-ECN-000006	03/03/05	RM

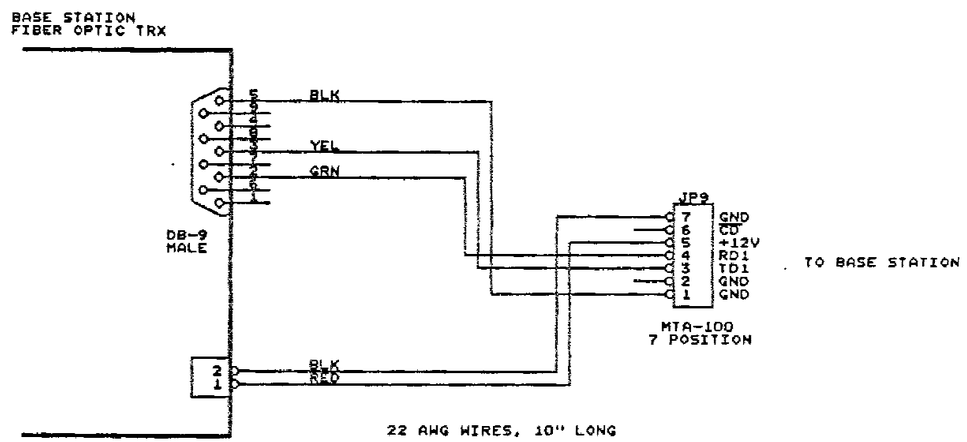

NOTE:
THIS PART IS FOR SPECIAL USE ONLY AND IS NOT PART OF THE STANDARD UNIT.
IF USED, RADIO MUST BE DISABLED.
SIMULTANEOUS USE IS NOT AN OPTION IN THIS CONFIGURATION.

Z32398.SCH

REVISION			
ENG	COASTAL ENVIRONMENTAL SYSTEMS SEATTLE, WASHINGTON		
Q.A.	Title CABLE, Z3200, RSOIS, BS TO FIBER OPTIC TRX		
Q.B.	Size	Document Number	REV
MAV	B	RSOIS-0001	D
	Date: November 9, 2000	Sheet 1 of 1	

SIZE D	CAGE CODE 82187	DWG NO. J700-4-5038	REV A
SCALE: NONE	SHEET 3 OF 6	FILE: J700-4-5038-3	
	LAST UPDATE: 04/22/03, 16:33		

REVISION HISTORY				
SHEET	REV	DESCRIPTION	DATE	APPROVED
4	–	1ST RELEASE	02/02/19	
4	A	ECN: RSOIS-ECN-000006	03/03/05	RM

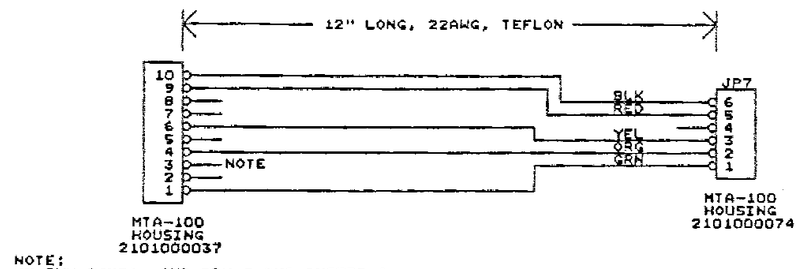

NOTE:
ON THE RADIO, CUT PIN 3 AND INSERT A POLARIZING PIN INTO THE POSITION 3 OF THE MATING CONNECTOR (THIS CONNECTOR).

Z32384.SCH

REVISION			
ENG	COASTAL ENVIRONMENTAL SYSTEMS SEATTLE, WASHINGTON		
Q.A.	Title CABLE, BASE STATION, ZEUS RADIO		
D.B. MAV	Size B	Document Number MAV-23200-0063	REV 0
	Date: November 6, 2000	Sheet 1 of 1	

SIZE D	CAGE CODE 82187	DWG NO. J700-4-5038	REV A
SCALE: NONE	SHEET 4 OF 6	FILE:J700-4-5038-4	
	LAST UPDATE: 04/22/03, 16:34		

REVISION HISTORY				
SHEET	REV	DESCRIPTION	DATE	APPROVED
5	–	1ST RELEASE	02/02/19	
5	A	ECN: RSOIS-ECN-000004	02/06/25	
5	B	ECN: RSOIS-ECN-000006	03/03/31	RM

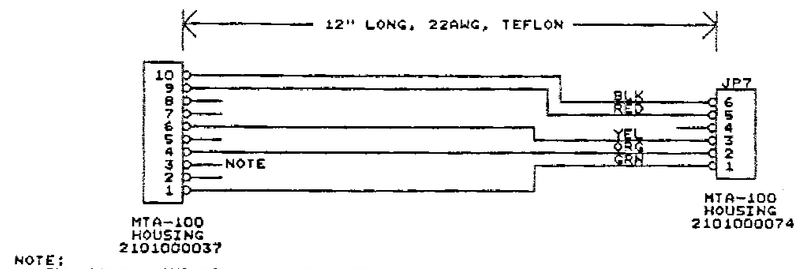

NOTE:
ON THE RADIO, CUT PIN 3 AND INSERT A POLARIZING PIN INTO THE POSITION 3 OF THE MATING CONNECTOR (THIS CONNECTOR).

Z32384.SCH

REVISION			
ENG	COASTAL ENVIRONMENTAL SYSTEMS SEATTLE, WASHINGTON		
Q.A.	Title CABLE, BASE STATION, ZEUS RADIO		
D.B. MAV	Size B	Document Number MAV-Z3200-D063	REV D
	Date: November 6, 2000	Sheet 1 of 1	

SIZE D	CAGE CODE 82187	DWG NO. J700-4-5038	REV B
SCALE: NONE	SHEET 5 OF 6	FILE:J700-4-5038-5	
		LAST UPDATE: 04/22/03, 16:34	

REVISION HISTORY				
SHEET	REV	DESCRIPTION	DATE	APPROVED
6	–	1ST RELEASE	02/02/19	
6	A	ECN: RSOIS-ECN-000004	02/06/25	
6	B	ECN: RSOIS-ECN-000006	03/03/05	RM

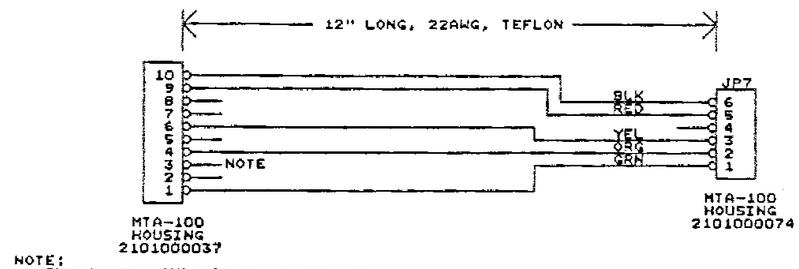

NOTE:
ON THE RADIO, CUT PIN 3 AND INSERT A POLARIZING PIN INTO THE POSITION 3 OF THE MATING CONNECTOR (THIS CONNECTOR).

Z32384.SCH

REVISION			
ENG	COASTAL ENVIRONMENTAL SYSTEMS SEATTLE, WASHINGTON		
Q.A.	Title CABLE, BASE STATION, ZEUS RADIO		
D.B. MAV	Size B	Document Number MAV-Z3200-0063	REV 0
	Date: November 6, 2000	Sheet 1 of 1	

SIZE D	CAGE CODE 82187	DWG NO. J700-4-5038	REV B
SCALE: NONE	SHEET 6 OF 6	FILE:J700-4-5038-6	
		LAST UPDATE: 04/22/03, 16:34	