REVISION HISTORY				
SHEET	REV	DESCRIPTION	DATE	APPROVED
1	–	ECN: RSOIS–ECN–000005	02/12/17	
1	A	ECN: RSOIS–ECN–000006	03–04–02	RM

NOTES:

1. INTERPRET DRAWINGS IN ACCORDANCE WITH MIL–STD–100, MIL–T–31000.
2. SHEET 2 OF THIS DOCUMENT GOVERN ACCEPTANCE OF THIS ITEM.
3. THIS DRAWING IS A DUPLICATE OF S200–4161

IDENTIFICATION OF THE SUGGESTED SOURCE(S) OF SUPPLY HEREON IS NOT TO BE CONSTRUCTED AS A GUARANTEE OF PRESENT OR CONTINUED AVAILABLE AS A SOURCE OF SUPPLY FOR THE ITEM(S).

REV STATUS	REV SH	A 1	A 2	3	4	5	6	7	8	9	10	11	12	13	14	15

NEXT ASSY	USED ON
J700–4–4103	RPU ENCLOSURE

APPLICATION

UNLESS OTHERWISE SPECIFIED:
DIMENSIONS ARE IN INCHES
TOLERANCES, ANGLES, ±.5°
3 PLACES DECIMALS ±.005
2 PLACES DECIMALS ±.02

PREPARED	PAYNE	BMP
CHECKED	LEONARDO	AL
DESIGN	LEONARDO	AL
C.M.	DAVIDSON	KD
APPROVED	LEONARDO	AL
DATE	02/12/17	

U.S. DEPARTMENT OF COMMERCE
NATIONAL OCEANIC & ATMOSPHERIC ADMINISTRATION
NATIONAL WEATHER SERVICE
1325 EAST WEST HIGHWAY
SILVER SPRING, MD 20910

BACKING PLATE FOR ENCLOSURE

SIZE	CAGE CODE	DRAWING NO.	REV
D	82178	J700–4–4161	A

SCALE NONE SHEET 1 OF 2 FILE NO. J700–4–4161-1 LAST UPDATE: 04/22/03, 16:24

REVISIONS				
SHEET	REV	DESCRIPTION	DATE	APPROVED
2	–	ECN: RSOIS–ECN–000005	02/09/20	
2	A	ECN: RSOIS–ECN–000006	03–05–04	RM

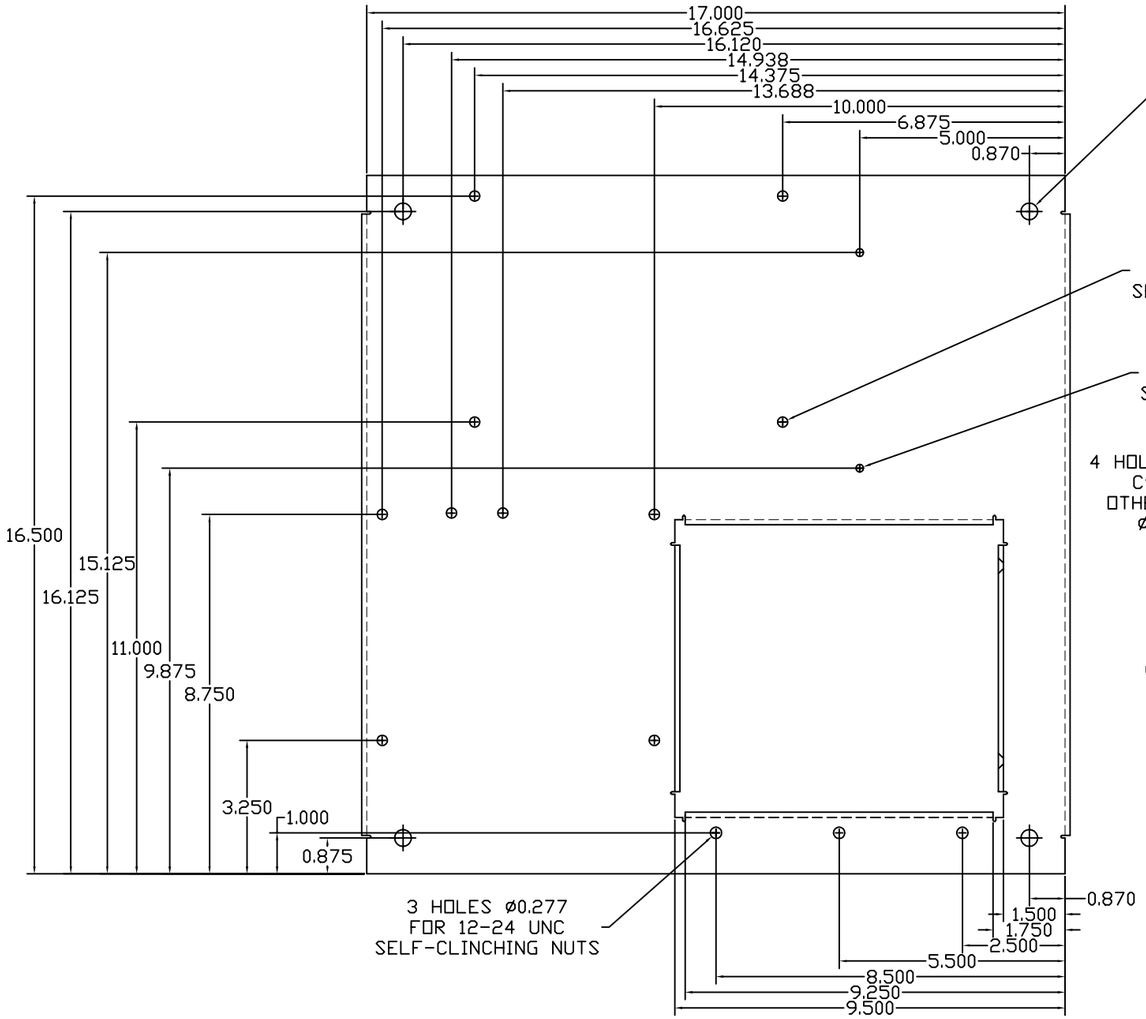

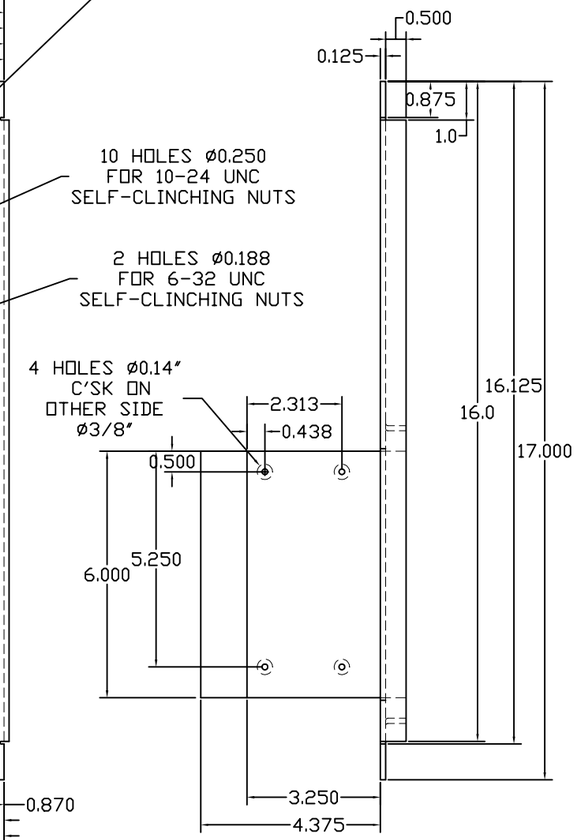

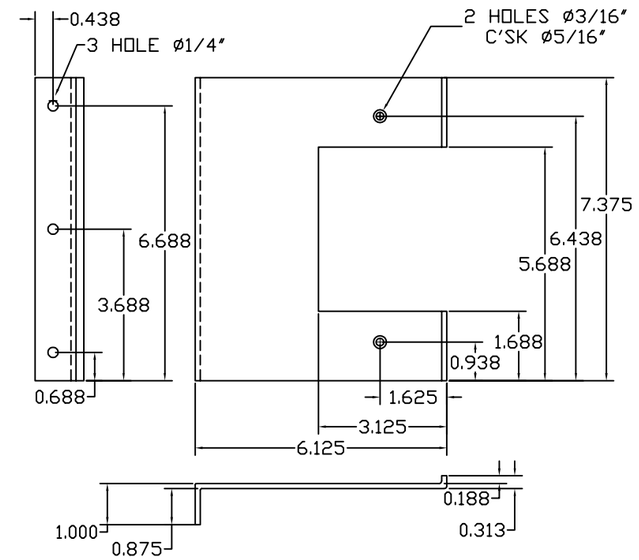

BRACKET FOR BATTERY

MATERIAL: ALUMINUM
FINISH: ZINC PLATE

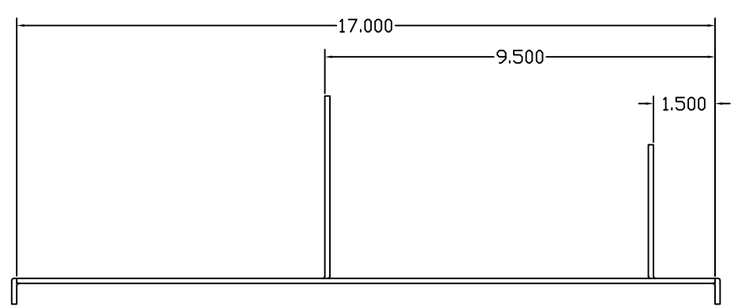

BACKING PLATE FOR ENCLOSURE

MATERIAL: 0.125 ALUMINUM
FINISH: ZINC PLATE

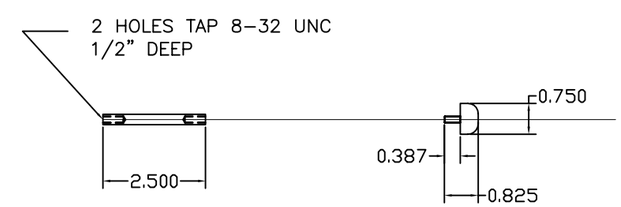

HEX SPACER

MATERIAL: 1/4"
ACROSS THE FLATS
HEX ALUMINUM BAR

RUBBER FOOT
WITH
THREADED
STEEL INSERT

SIZE	CAGE CODE	DWG NO.	REV
D	82187	J700–4–4161	A
SCALE NONE	SHEET 2 OF 2	FILE J700–4–4161–2	

LAST UPDATE: 04/28/03, 1015