PROPRIETARY DATA
THIS PROPRIETARY INFORMATION IS THE PROPERTY OF SIPPICAN, INC. AND SHALL NOT BE USED, DUPLICATED OR DISCLOSED IN WHOLE OR IN PART WITHOUT PRIOR WRITTEN AGREEMENT WITH SIPPICAN, INC.

NOTES (UNLESS OTHERWISE SPECIFIED):

1. MATERIAL: CASE TO BE MOLDED USING WHITE EXPANDED POLYSTYRENE 2.0 LB/CU.FT. DENSITY.
2. ANTISTATIC AGENT: CASE SHALL HAVE A CONTINUOUS COATING OF ANTISTAT 264A, PRODUCED BY AMERICAN MANUFACTURING INTERNATIONAL INC. C OF C REQUIRED FOR EACH SHIPMENT.

THIRD ANGLE PROJECTION

CHARACTERISTICS (DOD-STD-2101)	
CRITICAL-	NONE
MAJOR-	NONE
MINOR-	ALL OTHER CHARACTERS

REVISION HISTORY

REV	DESCRIPTION	DATE	APPROVED
A	DESIGN BASELINE RELEASE sjk	00/10/04	M.SHRAMKO
B	REVISED PER CN 31321	02/10/04	N.W.CUTLER
C	REVISED PER CN 31682	03/03/11	P.VIENS
D	REVISED PER CN 31963	03/04/23	[illegible]
E	REVISED PER CN 32063	03/04/23	[illegible]

UNDER DOCUMENTATION CONTROL

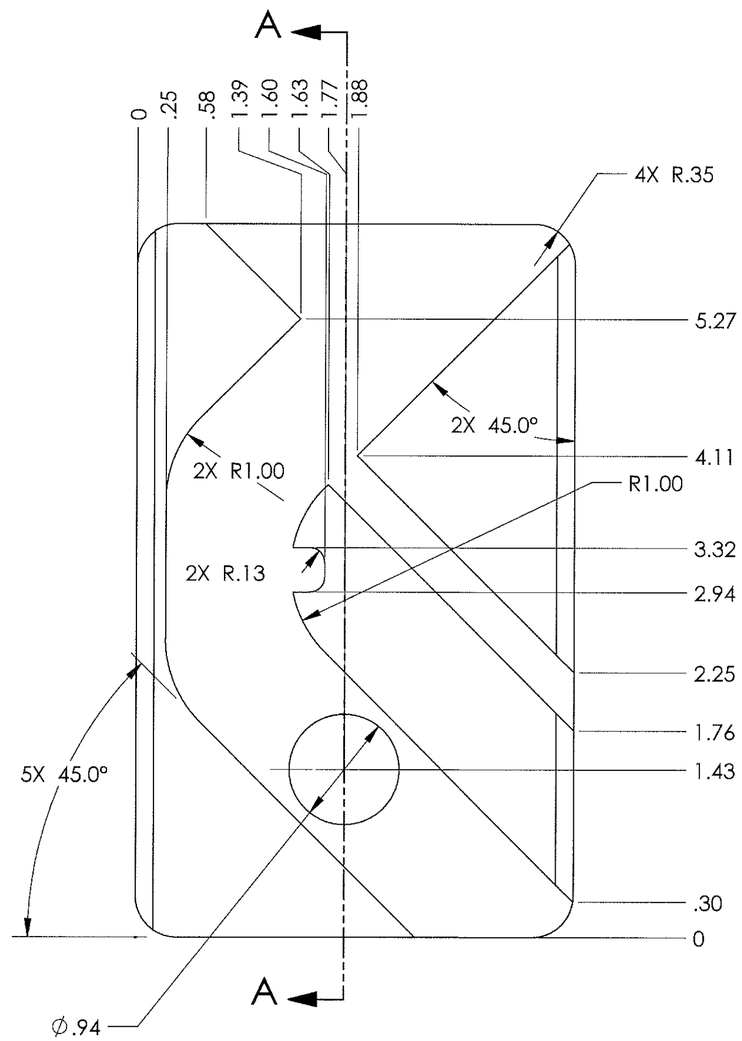

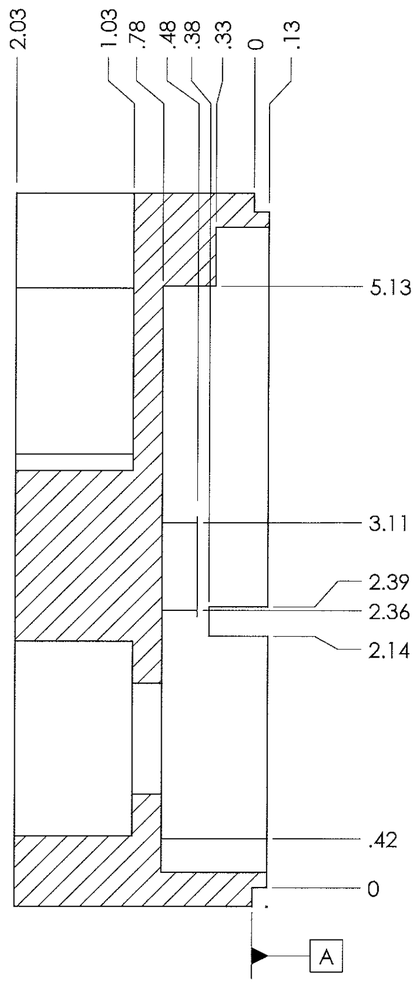

SECTION A-A

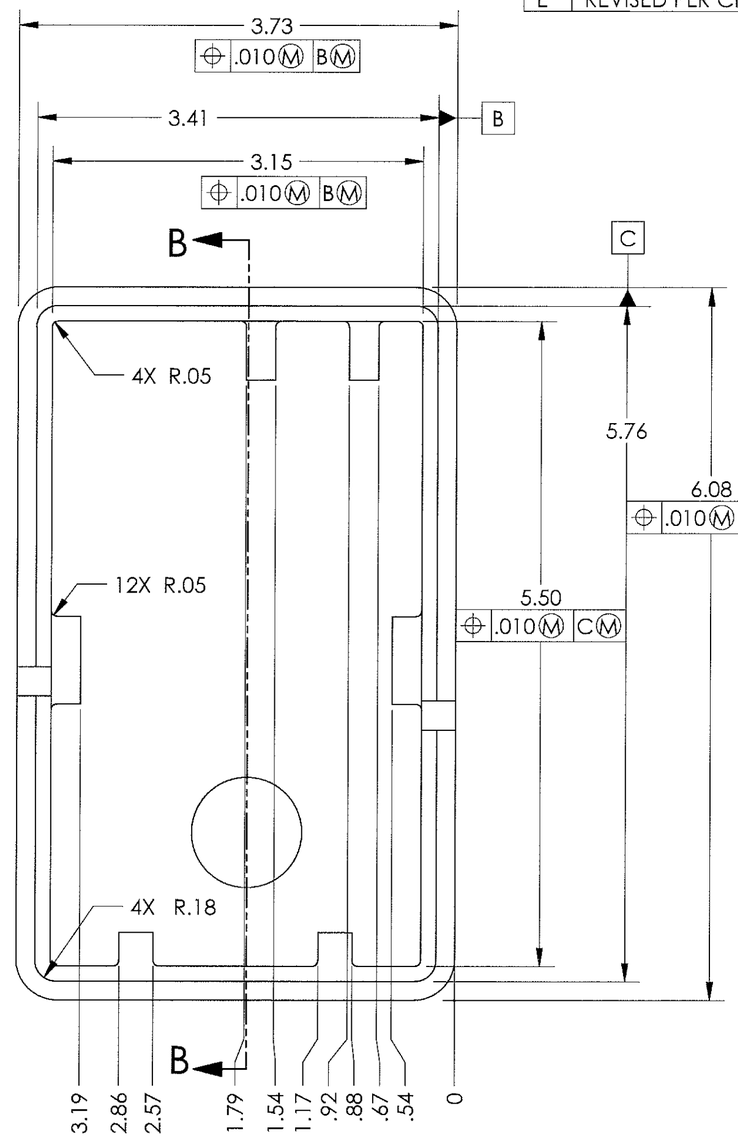

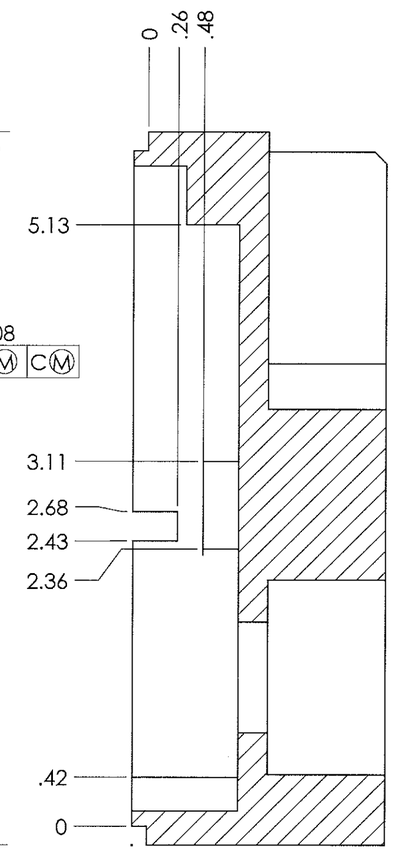

SECTION B-B

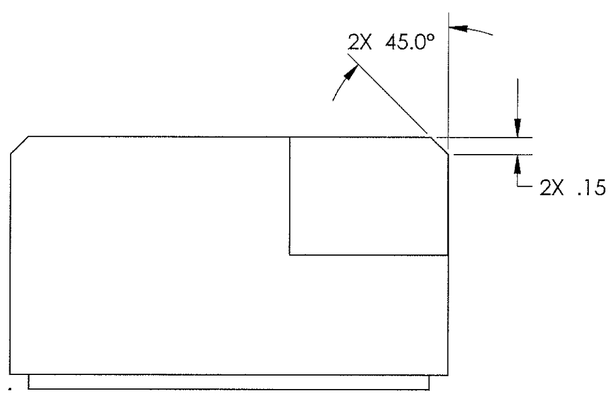

5/30/03

21 APRIL 03 11:40 AM

APPLICATION	
USED ON	NEXT ASSY.

MATERIAL: SEE NOTE
FINISH: SEE NOTE
DO NOT SCALE DRAWING

CONTRACT NO.

UNLESS OTHERWISE SPECIFIED
1. ANGLE=±0.50°
DIMENSIONS TOLERANCES
0 TO .999 +/- .015
1.000 TO 3.999 +/- .020
4.000 TO MAX +/- .030
2. ALL DIMENSIONS ARE IN INCHES
3. INTERPRET DRAWING IN ACCORDANCE WITH DOD-STD-100.

DWN.	J.GORMAN	00/05/03
CHK.	N.CUTLER	02/11/01
P.E.		
DES.ENG.	M.SHRAMKO	00/09/11
P.C.	K.MAZZOLA	00/09/20
Q.C.	J.MARUSCHAK	00/09/13
C.M.		
REL.		
MFG.	A.SEQUIERA	00/09/15
ENG.MGR.	T.deGROOT	03/04/24
OTHER		
OTHER		

Sippican, Inc.
MARION, MASSACHUSETTS 02738

TITLE: MKII A RADIOSONDE FRONT CASE

SIZE	CAGE CODE NO.	DRAWING NO.	REV.
C	16848	1549-128	E

SCALE: 1/1 SHEET 1 OF 1

DWG.NO. SHT REV E