NOTES (UNLESS OTHERWISE SPECIFIED):

THIRD ANGLE PROJECTION

CHARACTERISTICS (DOD-STD-2101)	
CRITICAL-	NONE
MAJOR-	NONE
MINOR-	ALL OTHER CHARACTERS

DWG.NO. 1549-055 SHT 1 REV C

REVISION HISTORY

REV	DESCRIPTION		DATE	APPROVED
A	DESIGN BASELINE RELEASE		02/08/29	P. VIENS
B	REVISED PER CN 31573	sjk	03/01/09	P. VIENS
C	REVISED PER CN 31834	sjk	03/09/12	

UNDER DOCUMENTATION CONTROL

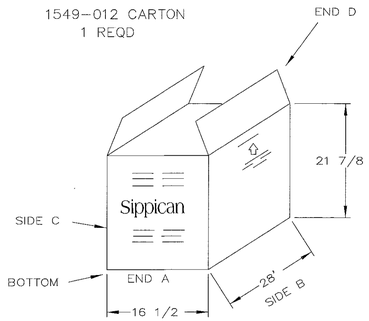

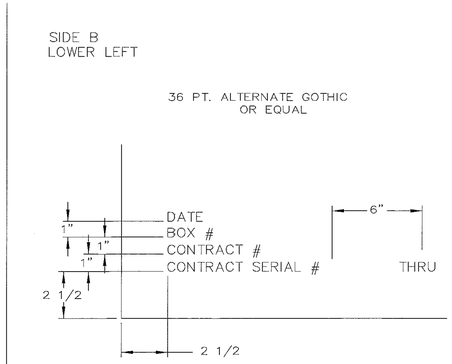

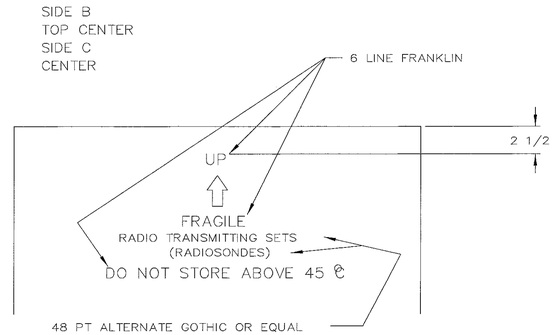

Limited Rights Notice (JUN 1987)

(a)These data are submitted with limited rights under Government Contract No. 50-DGNW-2-91008. These data may be reproduced and used by the Government with the express limitation that they will not, without written permission of the Contractor, be used for purposes of manufacture nor disclosed outside the Government; except that the Government may disclose these data outside the Government for the following purposes, if any, provided that the Government makes such disclosure subject to prohibition against further use and disclosure: Data may be disclosed to support service contractors or reproduced for use by support service contractors for the purpose of configuration management.

(b)This Notice shall be marked on any reproduction of these data, in whole or in part.

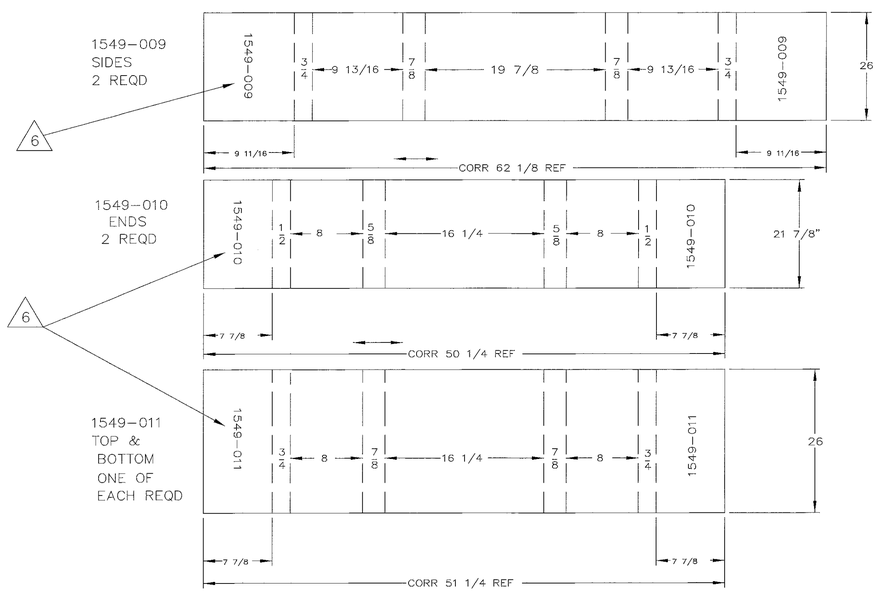

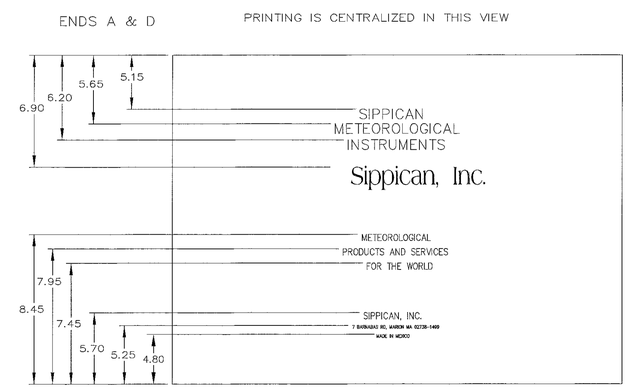

LETTERING SIZES:

Sippican, Inc. ---------- AMERIGO .144 PT BOLD
"S" DROPPED .25 INCH
TOYO RED #8082

SIPPICAN METEOROLOGICAL INSTRUMENTS------32 POINT
METEOROLOGICAL PRODUCTS AND
SERVICES FOR THE WORLD----------18 POINT
SIPPICAN, INC. ----------20 POINT
7 BARNABAS RD----------9 POINT
MARION, MA 02738-1499 USA----------9 POINT
MADE IN MEXICO----------9 POINT

ALL PRINTING – HELVETICA BOLD, EXCEPT WHERE NOTED.
J. MATTHEWS CO.

5/30/03

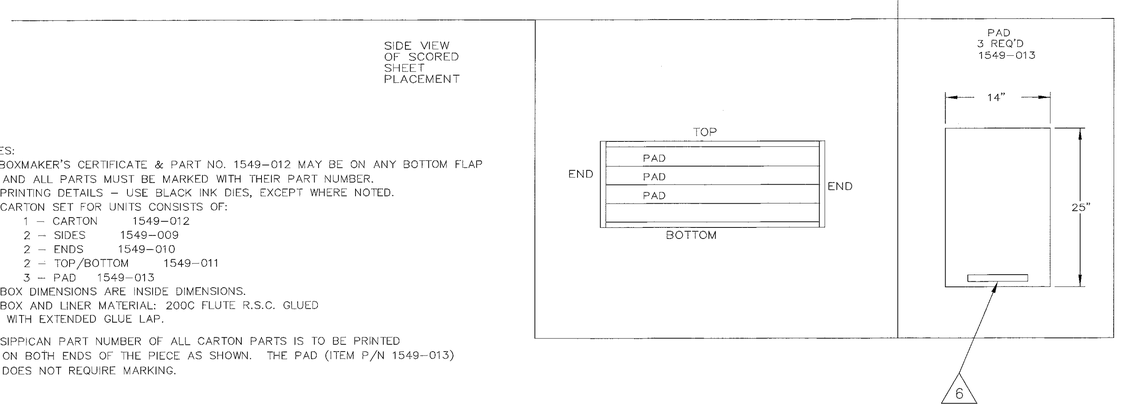

NOTES:
1. BOXMAKER'S CERTIFICATE & PART NO. 1549-012 MAY BE ON ANY BOTTOM FLAP AND ALL PARTS MUST BE MARKED WITH THEIR PART NUMBER.
2. PRINTING DETAILS – USE BLACK INK DIES, EXCEPT WHERE NOTED.
3. CARTON SET FOR UNITS CONSISTS OF:
   1 – CARTON 1549-012
   2 – SIDES 1549-009
   2 – ENDS 1549-010
   2 – TOP/BOTTOM 1549-011
   3 – PAD 1549-013
4. BOX DIMENSIONS ARE INSIDE DIMENSIONS.
5. BOX AND LINER MATERIAL: 200C FLUTE R.S.C. GLUED WITH EXTENDED GLUE LAP.
6. SIPPICAN PART NUMBER OF ALL CARTON PARTS IS TO BE PRINTED ON BOTH ENDS OF THE PIECE AS SHOWN. THE PAD (ITEM P/N 1549-013) DOES NOT REQUIRE MARKING.

APPLICATION	
USED ON	NEXT ASSY.

MATERIAL: SEE NOTE
FINISH: SEE NOTE

DO NOT SCALE DRAWING

CONTRACT NO.
CONTRACT

UNLESS OTHERWISE SPECIFIED
1. TOLERANCES:
.XXX= ±.005 .X= ±.02
.XX= ±.01 ANGLE= ±2.0°
2. ALL DIMENSIONS ARE IN INCHES.
3. INTERPRET DRAWING IN ACCORDANCE WITH DOD-STD-100.

DWN.		
CHK.	P.VIENS	02/08/29
P.E.		
DES.ENG.	P.VIENS	8/5/02
P.C.	M.CORMAN	8/8/02
Q.C.	J.MARUSCHAK	8/8/02
C.M.		
REL.		
MFG.	A.SEQUEIRA	8/9/02
ENG.MGR.	T.de GROOT	8/5/02
OTHER	N.W.CUTLER	03/01/10
OTHER		

Sippican, Inc.
MARION, MASSACHUSETTS 02738

TITLE:
CARTON SET, RADIOSONDE, MKIIA

SIZE	CAGE CODE NO.	DRAWING NO.	REV.
D	16848	1549-055	C

SCALE: NONE SHEET 1 OF 1

03 FEB 07 10:15:00