NOTES:
1. INTERPRET DRAWING IN ACCORDANCE WITH MIL-STD-100, MIL-T-31000 AND ASME Y14.24M.
2. THE FIRST DIGIT OF THE FIND NO. REPRESENTS THE RACK IN WHICH THE ITEM IS LOCATED. (ex. FIND NO. 6-11 IS LOCATED IN RACK NO. 6) A FIRST DIGIT OF 0 REPRESENTS EQUIPMENT EXTERNAL TO THE RACKS.
3. THESE ITEMS INCLUDING CABLES REPRESENT TYPICAL EQUIPMENT PROVIDED BY GTE AS PART OF SATELLITE BROADCAST SERVICE FOR AWIPS.
4. FOR SITE SPECIFIC CABLE INFORMATION, SEE SITE DWG. NO. AWP-xxxxxx-108-130. (ex. AWP-GLD000-108-130 FOR GOODLAND SITE)
5. FOR ADDITIONAL CABLE INFORMATION, SEE DWG NO. G-AWP-GENERIC-304-170.
6. FOR ALL CONNECTIONS, SEE DWG. NO. G-AWP-GENERIC-302-120, SH 2.
7. FOR ALL CONNECTIONS, SEE DWG. NO. G-AWP-GENERIC-302-120, SH 3.
8. FOR ALL CONNECTIONS, SEE DWG. NO. G-AWP-GENERIC-302-140, SH 4.
9. FOR ALL CONNECTIONS, SEE DWG. NO. G-AWP-GENERIC-302-270, SH 2.
10. ALTERNATE PRODUCT CONFIGURATIONS FOR WFO (FIND NO. 1-17) AND AND WFO-C (FIND NO. 1-18) SYSTEMS.
11. ITEMS PRESENT ONLY IN WFO SYSTEM.
12. WIRE NUMBERS STARTING WITH LA1CW (e.g. LA1CW13) ARE SITE DEPENDENT DUE TO WIRE LENGTH. THEREFORE, THE NWS NUMBERS ASSIGNED TO THESE CABLES ARE SITE DEPENDENT.

REVISION HISTORY

SHEET	REV	DESCRIPTION	DATE	APPROVED
1-3	-	GOV. RELEASE OF GENERIC WFO/WFO-C DWG: G-AWP-GENERIC-302-170	02/21/01	K.E.D.
1-3	A	MODIFY PER ECN NO. AWIP-ECN-000005	07/18/02	K.E.D.
1,2	B	MODIFY PER ECN NO. AWIP-ECN-000015	08/02/02	
1,2	C	ADDED ITEM 1-28, 1-29, 1-30, 1-31 AND 1-32	11/14/02	

FIND NO.	ITEM DESCRIPTION	SYSTEM ASSEMBLY DRAWING NO.	PRODUCT DRAWING NO.
1-32	5-PORT 100BaseT SWITCH, (SP/SW4)	G-AWP-GENERIC-101-100, SH 2	AWP-000000-109-0406
1-31	5-PORT 100BaseT SWITCH, (SP/SW3)	G-AWP-GENERIC-101-100, SH 2	AWP-000000-109-0406
1-30	DELL POWEREDGE 1650 - 2	G-AWP-GENERIC-101-100, SH 2	G-AWP-000000-109-0719
1-29	DELL POWEREDGE 1650 - 1	G-AWP-GENERIC-101-100, SH 2	G-AWP-000000-109-0719
1-28	LINUX POWERVAULT 220S	G-AWP-GENERIC-101-100, SH 2	G-AWP-000000-109-0720
1-26	5-PORT 100BaseT SWITCH, (SP/SW2)	G-AWP-GENERIC-101-100, SH 2	AWP-000000-109-0406
1-25	5-PORT 100BaseT SWITCH, (SP/SW1)	G-AWP-GENERIC-101-100, SH 2	AWP-000000-109-0406
1-18	SWITCH PANEL -1, -WFO-C	G-AWP-GENERIC-101-100, SH 2	G-AWP-000000-109-0210
1-17	SWITCH PANEL - 1, - WFO	G-AWP-GENERIC-101-100, SH 2	G-AWP-000000-109-0210
1-13	SATELLITE BROADCAST PROCESSOR - 2	G-AWP-GENERIC-101-100, SH 2	G-AWP-000000-109-0700
1-12	SATELLITE BROADCAST PROCESSOR - 1	G-AWP-GENERIC-101-100, SH 2	G-AWP-000000-109-0700
3- 9	MONITOR & CONTROL INTERFACE	G-AWP-GENERIC-101-100, SH 4	G-AWP-000000-109-0220
1- 9	DEMODULATOR - 2, EF DATA	G-AWP-GENERIC-101-100, SH 2	G-AWP-000000-109-0705
1- 8	DEMODULATOR - 1, EF DATA	G-AWP-GENERIC-101-100, SH 2	G-AWP-000000-109-0705
1-27	DEMODULATOR - 3, EF DATA	G-AWP-GENERIC-101-100, SH 2	G-AWP-000000-109-0705
1- 10	RF SPLITTER, 4 PORT	G-AWP-GENERIC-101-100, SH 2	AWP-000000-109-0708-1

SEE NOTE 10 (1-18, 1-17)

SEE NOTES 3 AND 11 (1-9, 1-8, 1-27)

ITEM LIST

UNLESS OTHERWISE SPECIFIED
DIMENSIONS ARE IN INCHES
TOLERANCES, ANGLES, ±5°
3 PLACES DECIMALS ±.005
2 PLACES DECIMALS ±.02

ENGINEERING DIVISION
SILVER SPRING, MD. 20910

PREPARED	B.O.F.	
D.S.T.	J.R.A.	
DESIGN	BOSCO	
C.M.	K.E.D.	
APPROVED	D.BOSCO	
DATE		

U.S. DEPARTMENT OF COMMERCE
NATIONAL OCEANIC & ATMOSPHERIC ADMINISTRATION
NATIONAL WEATHER SERVICE

AWIPS - WFO/WFO-C
SATELLITE BROADCAST(GENERIC)
NETWORK INTERCONNECT

SIZE	CAGE CODE	DRAWING NO.	
D	82187	G-AWP-GENERIC-302-170	C
SCALE NONE		SHEET 1 OF 3	FILE GEN2171C

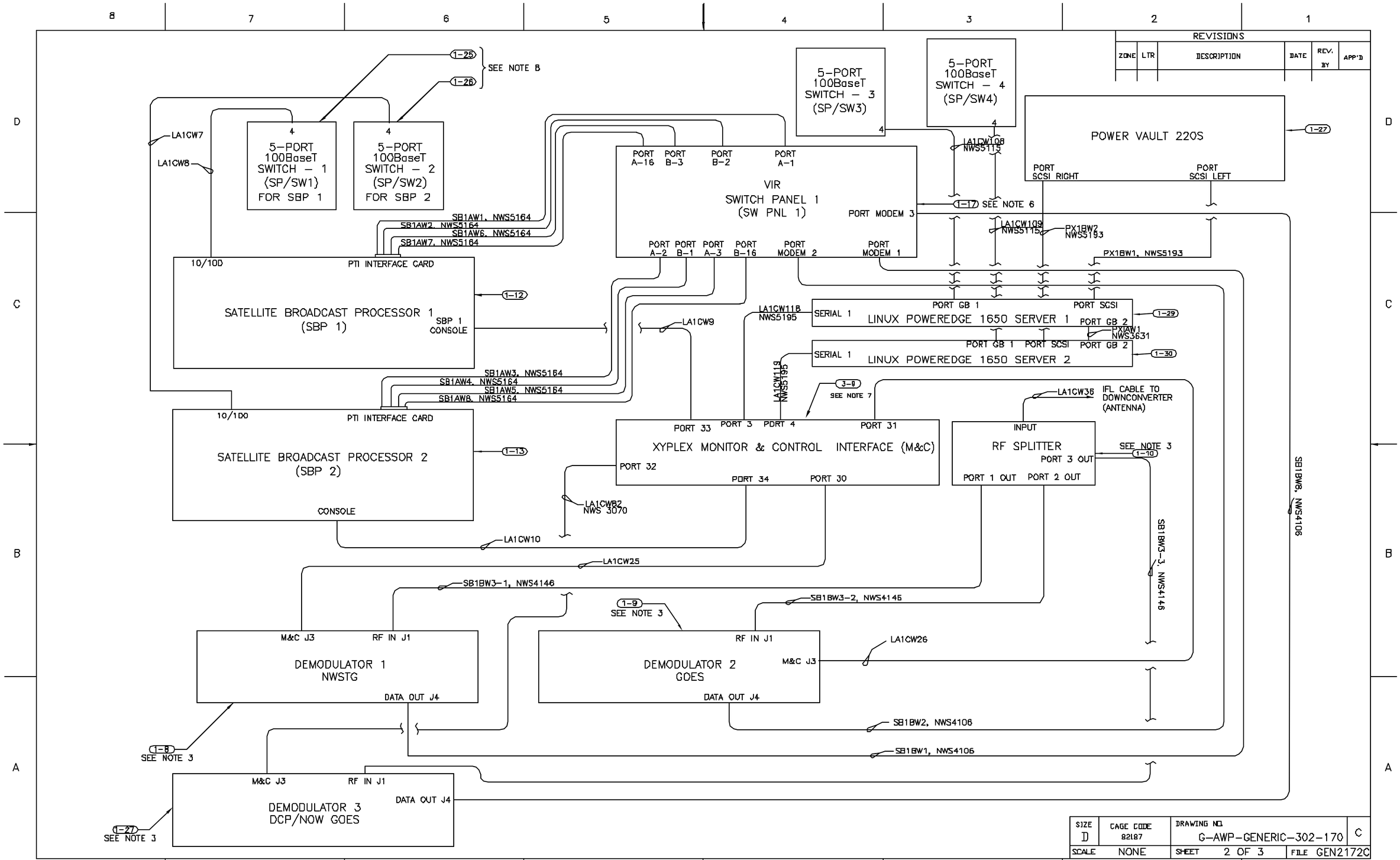
REVISIONS
ZONE
LTR
DESCRIPTION
DATE
REV. BY
APP'D
SEE NOTE B
1-25
1-26
5-PORT 100BaseT SWITCH – 1 (SP/SW1) FOR SBP 1
5-PORT 100BaseT SWITCH – 2 (SP/SW2) FOR SBP 2
5-PORT 100BaseT SWITCH – 3 (SP/SW3)
5-PORT 100BaseT SWITCH – 4 (SP/SW4)
POWER VAULT 220S
PORT SCSI RIGHT
PORT SCSI LEFT
1-27
LA1CW7
LA1CW8
LA1CW108 NWS5115
VIR SWITCH PANEL 1 (SW PNL 1)
PORT A-16
PORT B-3
PORT B-2
PORT A-1
PORT MODEM 3
1-17
SEE NOTE 6
LA1CW109 NWS5115
PX1BW2 NWS5193
PX1BW1, NWS5193
PORT A-2
PORT B-1
PORT A-3
PORT B-16
PORT MODEM 2
PORT MODEM 1
SB1AW1, NWS5164
SB1AW2, NWS5164
SB1AW6, NWS5164
SB1AW7, NWS5164
10/10D
PTI INTERFACE CARD
SATELLITE BROADCAST PROCESSOR 1 (SBP 1)
SBP 1 CONSOLE
1-12
LA1CW9
LA1CW118 NWS5195
SERIAL 1
PORT GB 1
PORT SCSI
LINUX POWEREDGE 1650 SERVER 1
PORT GB 2
1-29
PX1AW1 NWS3631
LINUX POWEREDGE 1650 SERVER 2
1-30
SB1AW3, NWS5164
SB1AW4, NWS5164
SB1AW5, NWS5164
SB1AW8, NWS5164
LA1CW119 NWS5195
3-9
SEE NOTE 7
LA1CW36
IFL CABLE TO DOWNCONVERTER (ANTENNA)
SATELLITE BROADCAST PROCESSOR 2 (SBP 2)
CONSOLE
1-13
PORT 33
PORT 3
PORT 4
PORT 31
XYPLEX MONITOR & CONTROL INTERFACE (M&C)
PORT 32
PORT 34
PORT 30
INPUT
RF SPLITTER
PORT 3 OUT
PORT 1 OUT
PORT 2 OUT
SEE NOTE 3
1-10
LA1CW82 NWS 3070
LA1CW10
LA1CW25
SB1BW3-1, NWS4146
SB1BW3-2, NWS4146
SB1BW3-3, NWS4146
SB1BW8, NWS4106
1-9
SEE NOTE 3
M&C J3
RF IN J1
DEMODULATOR 1 NWSTG
DATA OUT J4
DEMODULATOR 2 GOES
LA1CW26
SB1BW2, NWS4106
SB1BW1, NWS4106
1-8
SEE NOTE 3
DEMODULATOR 3 DCP/NOW GOES
1-27
SEE NOTE 3
SIZE D
CAGE CODE 82187
DRAWING NO. G-AWP-GENERIC-302-170
C
SCALE NONE
SHEET 2 OF 3
FILE GEN2172C

REVISIONS					
ZONE	LTR	DESCRIPTION	DATE	REV. BY	APP'D

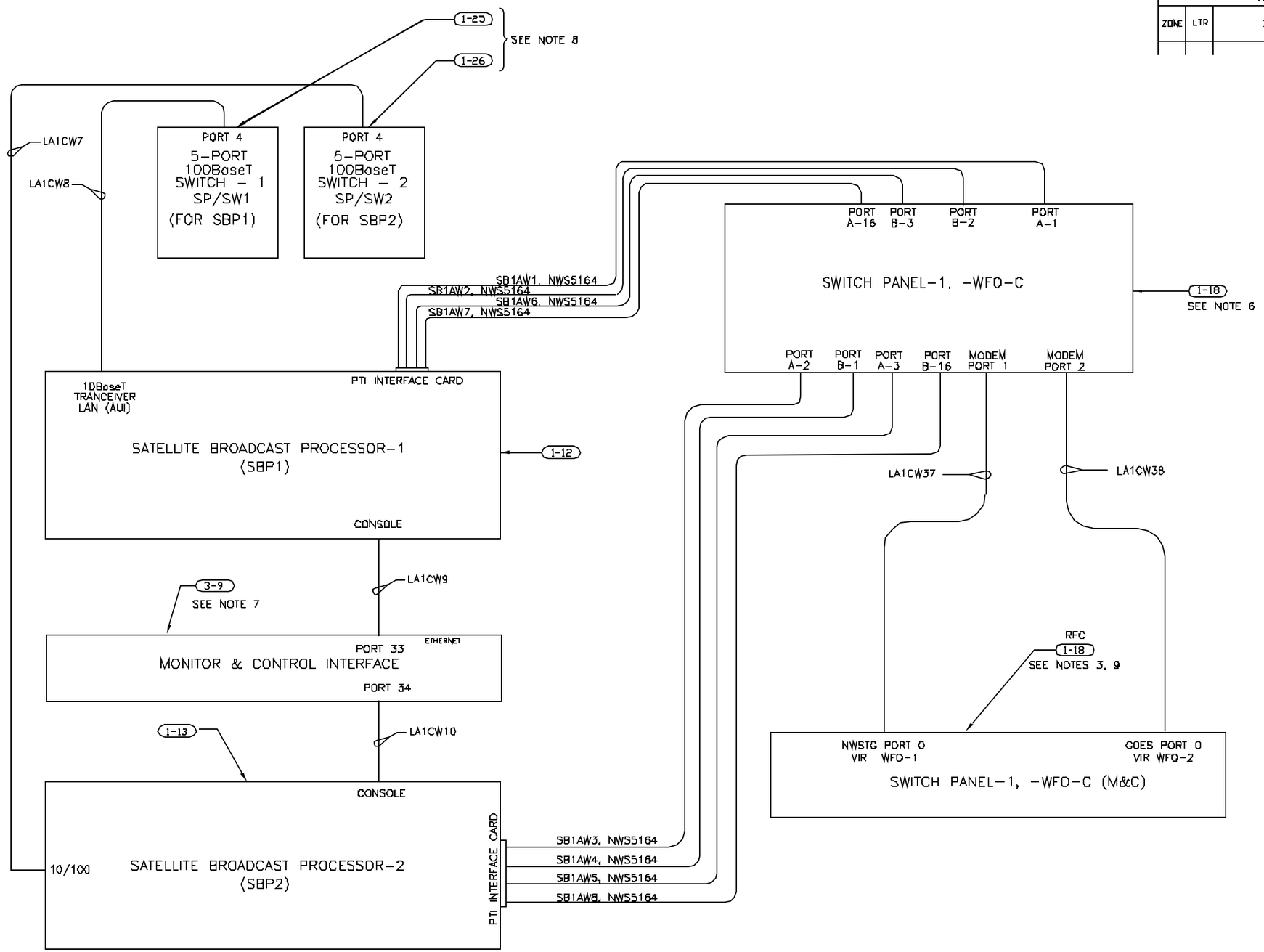

WFO-C INTERCONNECT

SIZE	CAGE CODE	DRAWING NO.	
D	82187	G-AWP-GENERIC-302-170	A
SCALE NONE		SHEET 3 OF 3	FILE GEN2173A